International Journal of Engineering and Advanced Technology (IJEAT)
ISSN: 2249-8958 (Online), Volume-9 Issue-3, February 2020

A Microcontroller-Based Light Intensity Adjustment of a Classroom Taking Into Consideration the Distribution of People

Awni Itradat, Mohammad Hammoudeh, Talal Al-Khawaldeh, Ahmad Ismail, Mohammad Al-Shorofat

Abstract*: *Nowadays energy conserving has become one of the most important approaches that concern governments, companies, universities, and even individuals. This rising concern is coming from the fact that the world currently suffers from rising fuel costs. This requires us humans and especially engineers to come up with solutions in which we can either find a way to reduce fuel costs, such as finding a replacement to provide us with the needed energy, or we can optimize the usage of the energy and fuels we have right now. This paper focuses on the second approach, in which we are trying to make lighting as energy-efficient as possible. This requires us to optimize lighting systems by using modern and energy-efficient technologies. Lighting systems being the subject of this paper comes as one of the best systems to apply solutions in which we reduce the energy consumption while keeping the performance as good as it is, if not better. And this is because lighting systems exist everywhere, offices, houses, companies, schools and universities, which make the benefits coming from the system we are proposing being folded multiple times, thus the effect will be way larger than any ordinary approach that targets system not as spread as lighting systems. In our proposed technique, we are applying lighting control system, which controls the intensity of lights in a class room. The results were as expected, applying such technology in a university for example will make the university a lot more energy-efficient than it is currently, in addition the university will witness a large cost reduction in terms of bills, and also will have a more advanced and healthier environment.

Keywords* : *Microcontroller, Light intensity, Energy efficient, lighting control system

I. INTRODUCTION

There is a lot of interest toward lighting systems technology [1-13], as it is one of the most major aspects that affect a very large number of the fields in life. This huge interest in lighting technologies comes from the fact that the world needs a lot of strategies to save energy, by using new approaches and technologies [2-10], cutting off as much as possible of expenses, or both. Our approach, lighting control system, is for a lot of people, ordinary people and experts, can be found as a solution to save a huge amount of energy. As for the benefits that come from lighting control systems, they can be as basic as just saving energy, up to where one can build a very healthy and energy efficient environment that can result in a huge cost reduction. These benefits are not a secret, nor do they come as breaking news in these days, as a matter of fact, because of them a number of companies have raised solely to get these benefits, in addition there are even larger number of technologies that have been developed for the same purpose. Nowadays the lighting systems technology is a field that is witnessing an incredible development and improvement on daily basis [14-26]. And because of that, there is an aggressive expansion for the lighting systems among many building owners, as well as facility managers, all want to make use of it to reduce their bills and power consumption. And because of the increasing demand on lighting systems, the technology took a further step by adding intelligent system technologies to over the lighting system technology, this step has took the lighting systems from being just applicable systems to be more desirable systems that ensure comfort and safety of facility and occupants.

Lighting control systems, as systems that are both useful and desirable, advertisement has been playing a big role to develop it, and expand it to reach more users around the world; magazines have been published just to advertise and announce the newest lighting technology today. In addition to that, many software programs have been built with their objective being to design and simulate lighting systems. Programs such as "Radiance", an open-source software, and the computer aided design Vector Works Spotlight, developed by Nemet check Vector works. These programs have become very well-known software programs used in particular by lighting designers in the past 10 years. And to give a better idea how much lighting control systems benefits their users, and how valuable the technology is, Table I below shows statistics concerning the amount of savings that one can gain by using lighting system technology:

Revised Manuscript Received on February 22, 2020.
* Correspondence Author
Awni Itradat*, Department of Computer Engineering, Hashemite University, Zaqaa, Email: itradat@hu.edu.jo
Mohammad Hammoudah, Department of Computer Engineering, Hashemite University, Zaqaa, Email: nqwertyuiop@hotmail.com
Talal Al-Khawaldeh, Department of Computer Engineering, Hashemite University, Zaqaa, Email: nqwertyuiop@hotmail.com
Ahmad Ismail, Department of Computer Engineering, Hashemite University, Zaqaa, Email: nqwertyuiop@hotmail.com
Mohammad Al-Shorofat, Department of Computer Engineering, Hashemite University, Zaqaa, Email: nqwertyuiop@hotmail.com

Table-I: The Amount of saving that can be gained by using lighting systems technology.

	Savings
Timers: dim and turn off lights when rooms are unoccupied.	Up to 40%
Photosensors: adjust electric light levels to take natural light into account.	Up to 20%
Occupancy sensors: Adjust lights based on occupancy detection	Up to 40%
Personal control: Individuals set light level to suit personal preferences.	Up to 10%
Demand Response: Reduce lighting levels to take advantage of demand response incentives from utilities	Variable
Combined savings	Up to 70%

All these savings are not everything one gains from using lighting control systems, as mentioned earlier we can create a healthier, safer and more comfortable environment for users and occupants too.

II. Literature Survey

In the field of lighting control system, and lighting design, many approaches were implemented over the years [1-13], started by turning off the lights whenever they are not needed, but this basic and initial approach had a number of drawbacks and downfalls, other than using non energy-efficient lighting source, the systems were not health considerate, and most importantly the cost was relatively high considering the system's features. In addition, there was the human factor, which by all means implies that the error rate will high, and the consequences might reach a catastrophic level. After that, systems developed and designed to include some control from a third party, the third party could be either a person or a group of people, observing the lighting system of someone else. This approach is considered an improvement of the previous ones, but still, it did not get rid of the human error factor, this is to be expected considering the fact that the system is still controlled by humans in the end. Although this approach did not make any sort of breaking ground accomplishments, it is worth noting that this particular approach is the back-up to any new smart automated lighting control systems. The next step for lighting control systems was toward automated and smarter systems [16-31]. One of the first technologies to be developed in this stage of the lighting technologies is MIDI 1.0 (Musical Instrument Digital Interface) [16], this was designed at first to run theaters and stages for MIDI clients, the MIDI 1.0 protocol is based on giving the microcontroller a logic-1 when no light is needed, and so no current will be provided in this case, and a logic-0 will be given whenever there is a need for light, this logic-0 will provide a current loop flow, which in turn will turn the lights on. Another example of automated systems is INSTEON [17], a human networking technology, designed and developed by SmartLabs Inc. The INSTEON approach relied on extra wiring as the backbone of the technology; the devices that falls under the domain of the system are connected as a network. The devices may include lights, television, radio, electrical locks, and varies collection of electrical devices. When a device's state is changed, the other devices of the network respond by changing their state accordingly, although this is not always the case, because sometimes the device may stay in the same state it was in before the activation/ deactivation of the previous device.

Control4 [18] is yet another leading company that takes a very good place in the field of lighting control systems; it is one of the systems that are based on Linux operating system, or at least this was the first step of the company, which afterward developed similar systems based on operating systems other than Linux, there is one Windows-based and another Apple-based designs. The technology of Control4 is based on building local networks for the elements of the system, as well as its components and devices, these parts of the system communicate with each other and with the controller (i.e. user) as well, using either TCP/IP protocol or Zigbee protocol (Zigbee protocol is a wireless mesh network protocol based on the IEEE 802.15.4 standards). The control4 systems added a new feature to the lighting realm, which was that the control of the whole system can be conducted from any place of the system; this feature adds more flexibility to the control of the system. As we have mentioned earlier, lighting technologies grew very fast over the years, in terms of both technology and number of users. And because of that, the earlier mentioned technologies, each did not last for a very long time, the demands were toward smart systems that can answer all the user's requests, and that is the direction where lighting systems technology moved to. In recent years, the bases of modern lighting control system design have become sensors, and logical controllers. And from this angle, it is worth mentioning that lighting control systems can provide the ability to automatically power a device on based on:

1- Alarms and Emergencies.
2- Presence of daylight.
3- Indoor and Outdoor Occupancy.
4- Astronomical Time.
5- Chronological Time.
6- Program Logic; which is any combination of any of the previous events.

Philip's Dynalite is the name of most advanced company in terms of technology, science, cost reduction, and the smartest systems designed. Their technology is mainly based on sensors instead of computer applications or control room.

Philip's Dynalite's design is the most evolved systems in the lighting systems, in which instead of turning the lights either ON or OFF, it creates what is called "Preset", a concept that falls under 4 levels. These levels are some degree of light intensity that one needs at some particular point in time; i.e. Preset4 means that the lights in some area are completely off. The lights can be turned ON when we go to any other scenario (scenarios of the system are displayed and discussed in further points in the proposed technique), Preset1 means that the lights in some area at some time are completely OFF.

In addition to their own optimum design, Philip's Dynalite does not rely on Network Protocols, neither wired nor wireless for that matter, instead the components of Philip's Dynalite communicate with each other via its own protocol Dy Net, which works using cables connecting the devices together, which in its turn adds more reliability to the system, and this is because signals hardly get lost or interrupted when we are using cables, which is not the case when we use wireless communication.

III. SYSTEM COMPONENTS

A. White LEDs

White LEDs are the most major component in our proposed technique, the essentiality comes from the fact that all the light intensity adjustment depends on source light that varies in terms of brightness.

- **LEDs Overview**

LED stand for Light-Emitting-Diode, which is a light source that utilize diodes that emit light when they are connected to an electrical circuit. What happens is that LEDs release a large number of photons outward; the LED itself is housed in a plastic bulb, which purpose is to concentrate the light source. LEDs normally do not tend to burn out or break; that is why they last a lot more than conventional bulbs. Since LEDs run by a small semiconductor chip (The technology is explained in the next section) they are very enduring and last for thousands of hours. Usually in the range of 50,000 – 100,000 hours of useful lifetime, comparing these numbers to the one's for Fluorescent tubes which is barely 10,000 – 15,000 hours makes the LED seems extremely favorable. Of course the comparison is to in favors of LEDs over Incandescent light bulbs even more, considering that the later's lifetime is 1,000 hours only, or in the best case scenario might reach 2,000 hours, which is still way less than the 100,000 hours or even the 50,000 hours of the LED.

LEDs also are "instant ON", this particular characteristic makes it the best fit for environments that are subject to frequent or potential ON-OFF cycling. And most importantly, is the dimming ability of LEDs, which is the subject of our proposed technique, LEDs can be very easily dimmed either by Pulse-Width-Modulation(PWM) or lowering the forward current.

- **LEDs Technology**

The key element of the LED technology is the semi-conductor chip that is located in the center of the light source. The chip itself has two regions apart from each other by a junction. The p-region is full of positive charges, while the n-region is pretty much full of negative charges. The junction is what stops the flow of electrons between the p-region and the n-region. When enough voltage is applied to the semi-conductor chip, the junction's effect fades away allowing the electrons to pass to the p-region.

On the other side, each electron will match up with a positive charge; this process converts the electrical potential energy into electromagnetic energy. This results a quantum of electromagnetic energy to be emitted in the form of a photon of light; note that this happens to each two charges when they recombine together, considering the huge amount of electrons, this process is conducted so many times, and accordingly a huge number of photons will be emitted, providing us with light.

- **Health Concerns**

Considering the current situation the world is in these days, the trend of technologies tends to be in the direction that combines energy-efficiency, cost-reduction, and healthier environments. A lot of lighting technologies carry on the side of harming both the environment due to the mercury content of bulbs is considerably high and human health as a result of the electromagnetic pollution.

Light in general is part of the electromagnetic spectrum. The original incandescent light bulbs generate along with the light heat, coming from the infrared radiation, which also takes place in the electromagnetic spectrum, the thing that makes Incandescent light bulbs to be considered as Energy-Inefficient. The much better technology yet not better than LEDs concerning health and energy-efficiency is the compact Fluorescent light bulbs, one of their drawbacks comes in form of harming human health, Fluorescent light bulbs generate heat just like Incandescent light bulbs do, although much less heat, but they also generate radio frequency radiations and ultraviolet radiations, these radiations have been associated with harming health concerns, the thing that make Fluorescent light bulbs not very much energy-efficient nor human-health consideration were put as top priority.

Instead of using any of the previous mentioned two alternatives, one can settle with the best technology to-date when it comes to lighting, LEDs. LEDs do not produce radio frequency nor ultraviolet radiations, which make it the safe alternative for the environment and human health, in addition LEDs are considered cool light source, they produce very little heat, and instead of this heat being radiated alongside the light, it is dispersed through the base of the LED which makes LEDs energy-efficient as well.

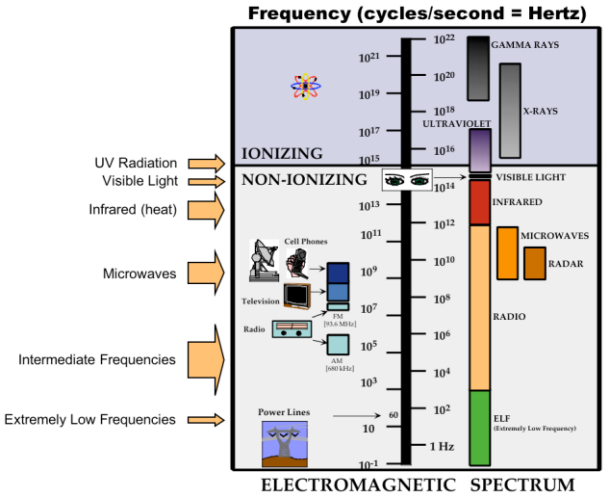

Fig. 1. Electromagnetic Spectrum [21]

An On-Line survey has been conducted to determine how electrically sensitive people respond to a various number of lighting types. The figure below shows the results of this survey:

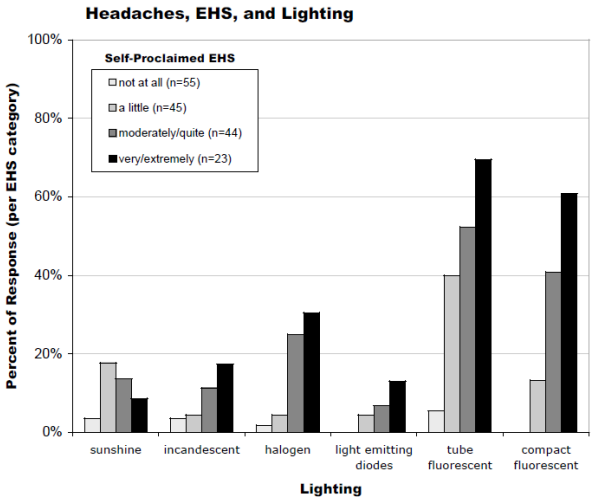

Fig. 2. Online survey results, conducted to test the response of people to different lighting sources [21]

As can be seen from the Fig. 2, LEDs are the best lighting source when it comes on putting human health in consideration [21]. And these results do not come in shock actually, considering the facts we have stated so far, LEDs were expected to be the best alternative for healthy lighting source.

- **Cost Reduction and Savings**

Although LEDs initial cost is higher than most of the other lighting sources, this is not the whole story. LED's price per bulb is 8 times more than the price of Compact Fluorescent light bulbs and 25 times more than incandescent light bulbs, but LEDs lifetime is 9 times more than compact fluorescent light bulbs and 100 times more than the incandescent light bulbs, which make it in total more cost-efficient.

The table below shows how much each of the three alternatives costs:

Table-II: Cost comparison between different light source types [28].

	LED	Compact Fluorescent Light	Incandescent Light
Useful Lifetime	50,000 – 100,000 hours	10,000 – 15,000 hours	1,000 – 2,000 hours
Cost Per Bulb	30 $	4 $	1.25 $
Equivalent 100,000 hours bulb expense	30 $	40 $	125 $

Note: The prices above have been collected through excessive an online search that has been conducted by this proposed technique's researchers.

This amount of savings is good, but what is even better, is to multiply this number by 1596 (1596 is the number of fluorescent lights that are used in the department of engineering in the Hashemite University, inside the classes only; laboratories and offices are excluded from this and any later calculations). Note: a table that contains each class room and how many light tubes are in the engineering department is included in Appendix A.

The billings will be reduced dramatically if we use LEDs instead of compact fluorescent light tubes, especially when we consider that there are 25 class rooms in the engineering department, the amount of reduction will be very large. In addition to that, we can improve the cost reduction by reducing the number of light sources in-use currently.

Instead of having four fluorescent light tubes in each block, having three columns in each class room, and four to five rows in each class room, which is a large number of fluorescent light tubes (1596) to provide each area with the desired amount of lighting, we can reduce this number to become approximately (1197) Light-Emitting-Diodes bulbs, which is 75% of the total number of fluorescent light tubes. This can be done by simply use sectoring concept, instead of having four fluorescent light tubes lined up, we can sector the block, which will be transformed to a circle if this proposed technique is to be implemented across the university, into three sector, with separation angle equals to 120 degrees, each of the three sectors will contain one LED, and by this we can provide the desired lighting using less number of lighting sources.

All these savings are fascinating, but this is not what all that our proposed technique's does. The previous mentioned savings come from only replacing the light source from being compact fluorescent light tubes to become lighting emitting diodes (LEDs). Our proposed technique contains another part that can help reducing the costs, in addition to using LEDs, which to be noted is an essential key element to implement our proposed technique, smart lighting intensity control is our proposed technique and the second part that is considered a great factor in matters of cost reduction; by lighting intensity control we can save energy and cost by dimming the light bulbs down when their light is not needed, or even turning them off whenever the case demands.

For the following calculations we have the following assumptions and acknowledgements:

- The average number of students is the number of students registered in a particular class (course).
  Note: this information has been collected through the registration department in the university.
- Any given class room is used for lectures for 3 hours per day.
- The week consists 5 days only (since we have Friday and Saturday off, no lectures will be conducted).

Note: the average number of students in each class as well as the number of chairs in each class is included in Appendix A.

The average savings that can be obtained through lighting intensity control in class rooms is calculated as follows:

1) The number of chairs in each class room.
2) The number of students in each class room.
3) Calculate the saving according to the ratio chairs to students per class.
4) Find the average savings for all the classes together.

The average savings through light dimming (lighting intensity control) = 30.68% for all the class rooms together. It is becoming clearer that lighting intensity control systems are very efficient solution when it comes reduce the costs. The following table is a summary to the comparison we have been conducting through this section between light sources [30]:

Table-III: Features Comparison between different types of light source [30].

	LEDs	Compact Fluorescent Light	Incandescent Light
Instant ON	Yes	Delay	No
Durability	Robu st	Fragile	Fragile
Heat Produced	Low	Moderate	High
Effect of frequent ON/OFF cycling	No Effect	Shorten the useful lifetime.	Increase the possibility to break or burn out.

B. Sensors

Sensors are the control-room replacement in smart system, as we have mentioned earlier, sensors are the detectors to the changes in the system, and according to their readings the system will work.

Sensors can be considered specific-purpose devices; a sensor may detect the existence of light, or the occupation in a room. And for each purpose there is a particular sensor that can fulfill this purpose.

In this scheme, we are using laser beams and light sensors, this is not efficient for implementing the idea in real life, because of the limitations laser beams have, especially the fact that they are extremely focused; this would create a big problem if it was considered to be used in a class room for example, because the number of laser beams and their corresponding sensors would be huge in order to make the system's precision good enough.

The following are the sensors that would have been used if the proposed technique was to be implemented in a real class room:

- **Motion Sensor**

Motion sensor is an electronic motion detector that transforms motion detection into digital signal, which in turn will be passed to the microcontroller.

Fig. 3. Motion Sensor.

There are various types of motion sensors that can do basically the same job, but in different ways, such as the Ultrasonic Motion Sensor and the Microwave Motion Sensor, both of them send out pulses in form of ultrasonic and microwave respectively, and then the sensor measures the reflection of the pulses that have been sent out, and according to the reflection the sensor understands if there is a motion nearby or not. This sensor would be placed at the door of a class room, and will detect of there is a person (e.g. a Professor) is approaching the room.

- **Occupancy Sensor**

Motion sensor, is used to detect the approach of a person to the class room, but once there is a professor or students inside the room, the readings of motion outside the class room will not matter anymore. And that is where the occupancy sensor comes in turn.

Fig. 4. Occupancy Sensor.

Occupancy sensor is used to determine the presence in the area covered by the sensor. Just like motion sensors, occupancy sensors can be implemented and found in various forms, like Infrared Sensors, Acoustic Sensors, or even better, a combination of both.

It is important to note that the occupancy sensor is the most important sensor in this proposed technique, because it is this particular sensor's job to give the readings of people's presence and their whereabouts to the microcontroller, which in turn will adjust the light intensity accordingly.

When there is a presence detected, the lights should be at full brightness state, and when there is not, the light brightness should be turned down, thus saves energy and billing costs.

- **Daylight Sensor**

Another sensor which use comes in handy in the proposed technique is the daylight sensor. Mainly because of the purpose it serves. Daylight sensors detects daylight, this is important because if a particular room is already lightened by the sun, even of it was full of students, the lights should not be turned on because there is no need to do so. This sensor in particular, optimizes the use of the previously mentioned occupancy sensor. Because it controls its use and focus it to work only when it is needed, and turn it off when it is decided that it is no longer needed to have supplemental electrical light.

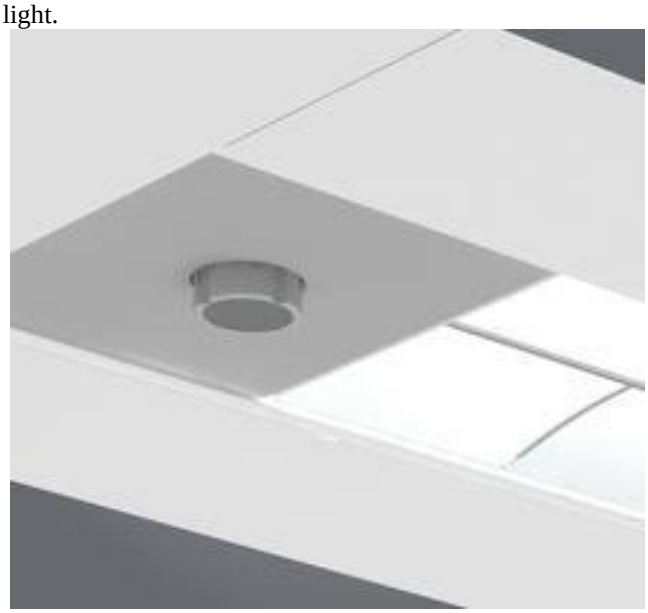

Fig. 5. Daylight Sensor.

It is important to note that there are sensors that combine the last two sensors' objectives in one, the figure below shows such sensor.

Fig. 6. Daylight and Occupancy Sensor.

- **Switch**

Switches are electrical component that sole purpose is to break a circuit.

In our proposed technique, the switch has the top priority of all sensors and components in the system, in both the model and the real-life implementation. It is connected to the proposed technique or, and when the proposed technique or is turned ON, all other sensors are put in sleep mode, and so their readings would not matter from that moment on, until the proposed technique or is turned OFF.

Fig. 7. Switch

C. Microcontroller PIC 18F452

The microcontroller is the brain of the proposed technique, it is the component that takes all the readings from all the sensors, and it is the one that control the lighting intensity in the room accordingly. It is the one component that links all others together, and maintains the system stability.

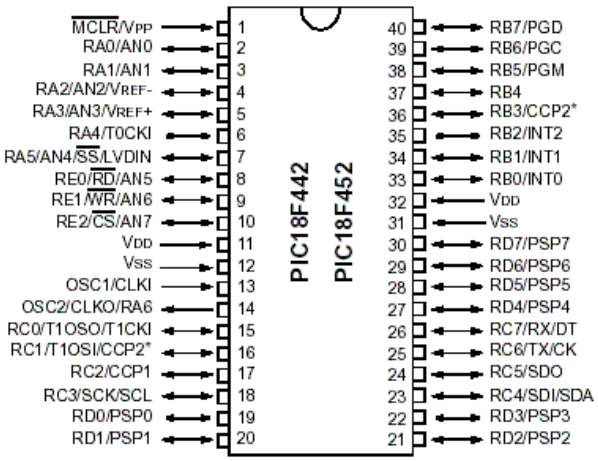

Fig. 8. PIC18F452 microcontroller.

PIC18F452 has been chosen as the used microcontroller of the proposed technique mainly because it has multiple ports (four in particular), which allows us to program the PIC under a large number of Inputs as well as Outputs using only one microcontroller, instead of having a number of microcontrollers each complement the other.

This is useful to add more simplicity in the wiring as well as in the programming and implementation. The PIC18F452 is an assembly-based microcontroller, but one can also use C programming language to program it. In our proposed technique we have used Assembly language. In addition to the number of ports the PIC18F452 microcontroller has, it also has other good features which were taken in considerations when choosing the microcontroller to be used. The PIC18F452 a very powerful in matter of speed, 100 nanoseconds instruction execution time, it is a CMOS FLASH-based 8-bit chip the thing that helps to test multiple approaches during the coding part and also gave us the ability to do testing while the program had not been completely finished, it also contains 44-pins and is upward compatible with the PIC16CXX, PIC12CXX, and PIC17CXX devices and thus providing smooth migration path of software code to the hardware integration's higher levels.

Another feature that is considered important for the sake of the proposed technique is that the PIC18f452 includes Pulse-Width-Modulation functions, which is the key technology we have used in our proposed technique. It has a speed that reach up to 40MHz, which is very important considering the nature of our proposed technique, and how much delay would affect the implementation negatively.

IV. DESIGN AND IMPLEMENTATION

Because the proposed scheme is to create a system which can make use of light intensity control. And to do so, we have chosen to implement the concept of light intensity control on a class room. Our choice has been based on a number of factors, first we wanted to implement a lighting control system on an environment that will be affected deeply by such technology, and since class room's lighting is a major aspect in any class room, it has been considered as good candidate on which to implement the lighting control system. In addition, considering the large number of class rooms in the department of engineering in the Hashemite University, twenty five class rooms to be precise, the benefits we obtain will have larger effect if it has been implemented over all the rooms, the thing that we have explained in earlier section.

The first step was to choose a class room to build a model of it; we have chosen the room 2010 to be the room to implement the proposed technique on.

The second step was to actually build the model; the figure below shows the model we have built:

Fig. 9. The Model of Class Room E2010

The third step was to build the circuit which will be used in the proposed technique, the circuit includes all the components used in the system, either they are attached directly to it, like the PIC18F452 microcontroller, or connected to it via wires, like the laser beams and the sensors used in the model.

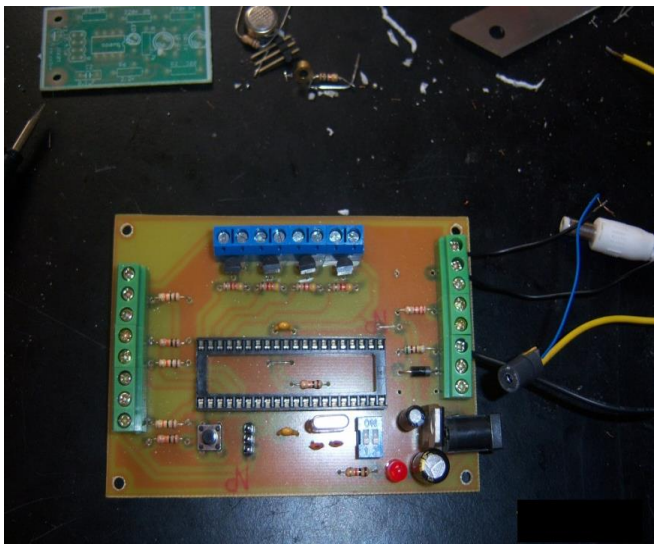

Fig. 10. The circuit used in the proposed technique (real-view).

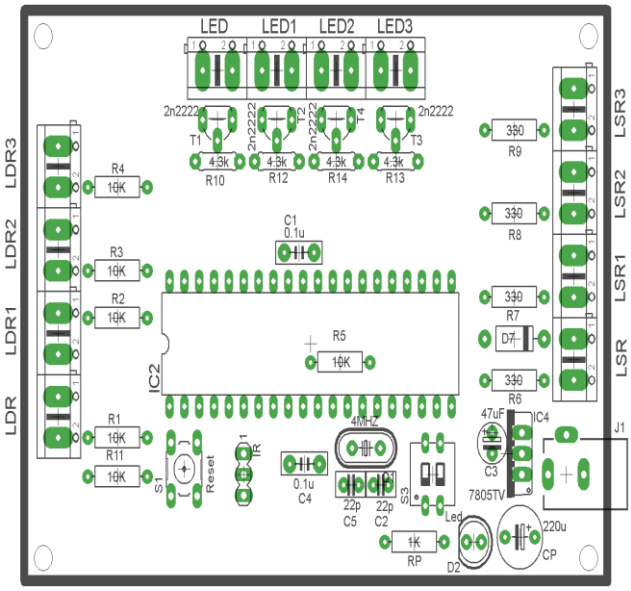

Fig. 11. The circuit used in the proposed technique (detailed).

The forth step was to connect all the components together, so our model would be ready in terms of hardware implementation.

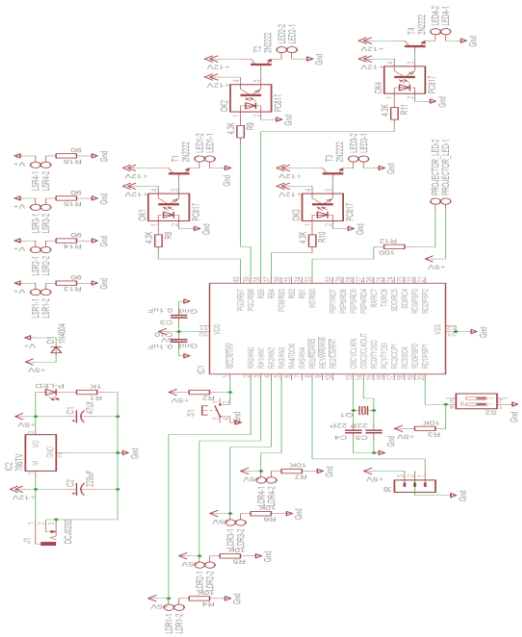

Fig. 12. The complete circuit, connected to all the system's components.

The fifth step was to start programming the PIC18F452 microcontroller. Now the coding part, which took a huge chunk of the proposed technique's load was implemented using Assembly language as mentioned earlier. In the coding part, we created subroutines to each possible scenario for the students' distribution in the class room. For example, for the scenario in which there are students in the first row, and there are students in the second row, the code was as follows:

```
'** scenario 4: **
'* row 1 and 2 detect students *
SENSOR
IF (LDR1<400)AND(LDR2<400)AND(LDR3>700)AND(LDR4>700) THEN
WHILE (LDR1<400)AND(LDR2<400)AND(LDR3>700)AND(LDR4>700)
IF PROJCTOR=1 THEN GOTO scenario18 END IF
SENSOR
LED1=1
LED2=1
DELAY5
LED3=1
DELAY5
LED4=1
DELAY5
LED3=0
LED4=0
DELAY5
WEND
END IF
PORTB=0
PROJECTOR_LED=1
```

In this scenario, the lights above the first and second row will be at their full brightness (i.e. 100%), while row 3 will be half the maximum brightness (i.e. 50% of the maximum brightness it can be) and row 4 will be 25% of the maximum brightness it can be. The rate in which the light brightens has been chosen in order to provide optimum environment for the students and the professor. The backlights are not supposed to vanish immediately, for health reasons the light is supposed to fade away instead. In addition, there should not be a gap in lighting to avoid harming the students that is why we have the lights in front of the student to be at least 75% the brightness he is receiving directly. Note: the complete scenarios (total 18 scenarios that cover all possibilities) of the proposed technique can be found in the user's guide. Note: This technique is a full automated lighting control system. In which the light intensity is automatically changing and adjusted according to a number of factors, such as the proposed technique or is being ON or OFF, the existence of students and their whereabouts.

The system is modeled according to class with four rows of lights, each consists multiple columns. And to cover all possibilities, there has been found eighteen scenarios by which the system can be stated in. the table below shows these scenarios:

Note: when a row is not mentioned to have detected students, it implies that it has not.

Note: when a particular Row detects students, it means that the sensor to which the Row is referring is detecting students.

Developer's Guide

In our proposed technique, we are implementing a fully automated Lighting Control System, in which the lights in a class room (as in our model) are turned ON whether that was at full brightness or different intensity of brightness or even turned OFF. The technology that has been used in the proposed technique in order to produce various brightness levels is Pulse-Width-Modulation. Pulse-Width-Modulation (PWM) is a way of delivering some output as a result of successive pulses (Digital Signals) instead of using continuous varying signals (Analog Signals). By increasing or decreasing the pulse width, the microcontroller (in general, this can be applied to almost any controller) regulates energy flow to the system (LEDs).

Table-IV: The possible scenarios the system can be stated in.

Scenario Number	Scenario Description	Row-1 Lighting Intensity	Row-2 Lighting Intensity	Row-3 Lighting Intensity	Row-4 Lighting Intensity
1	No students in the room and motion sensor does not detect any approach to the room.	0% (OFF)	0% (OFF)	0% (OFF)	0% (OFF)
2	No students in the room, but the motion sensor detects someone is nearby	25%	25%	25%	25%
3	There are students in the room, but all of them are in Row-1 (the rest are empty).	100%	50%	25%	25%
4	There are students in Row-1 and in Row-2 too.	100%	100%	50%	25%
5	Row-1, Row-2 and Row-3 detect students.	100%	100%	100%	50%
6	All rows detect students.	100%	100%	100%	100%
7	Only Row-2 detects students.	75%	100%	50%	25%
8	Row-2 and Row-3 detect students.	75%	100%	100%	50%
9	Row-2, Row-3 and Row-4 detect students.	75%	100%	100%	100%
10	Only Row-3 detects students.	75%	75%	100%	50%
11	Row-3 and Row-4 detect students.	75%	75%	100%	100%
12	Only Row-4 detects students.	75%	75%	75%	100%
13	Row-1 and Row-3 detect students.	100%	75%	100%	50%
14	Row-1 and Row-4 detect students.	100%	75%	75%	100%
15	Row-2 and Row-4 detect students.	75%	100%	75%	100%
16	Row-1, Row-2 and Row-4 detect students.	100%	100%	75%	100%
17	Row-1, Row-3 and Row-4 detect students.	100%	75%	100%	100%
18	The Projector is ON. (Regardless the students' presence and their whereabouts).	0% (OFF)	0% (OFF)	0% (OFF)	0% (OFF)

The main advantage of using Pulse-Width-Modulation is the efficiency. Since there is no additional hardware to be added, we optimizing the utilization of the microcontroller. In addition, the system requires the minimum amount of wiring since no addition hardware has been added to obtain different light intensity levels. And comparing to the alternative of adding hardware to do the same task, pulse-Width Modulation technology not only saves the cost of the additional hardware, but it also saves more energy; hence less hardware, and also it does not generate any additional heat in the process, thus the other components of the system will not suffer from any unfavorable effects and so their useful lifetime will not be affected.

In the proposed technique, when a 50% light intensity is required, the corresponding LEDs are to enter the lighting function after half the time of the instruction "Turning the LEDs ON" has started. This means that the duty cycle of the corresponding LEDs will be 50% of the full instruction cycle, which will lead to halving the brightness and giving us the desired 50% of maximum brightness. To do this, one needs to know the frequency of the microcontroller in-use, in order to determine the amount of delay that should be given to get the desired output.

```
349 '** scenario 17: **
350 '* rows 1,3 and 4 are detecting students *
351 SENSOR
352 IF (LDR1<400)AND(LDR2>700)AND(LDR3<400)AND(LDR4<400) THEN
353 WHILE (LDR1<400)AND(LDR2>700)AND(LDR3<400)AND(LDR4<400)
354 IF PROJCTOR=1 THEN GOTO scenario18 END IF
355 SENSOR
356 LED1=1
  • LED3=1
  • LED4=1
  • LED2=1
360 DELAY15
  • LED2=0
  • DELAY5
  • WEND
  • END IF
365 PORTB=0
  • PROJECTOR_LED=1
```

In the part of the code above (scenario 17), the LEDs in Row-2 were supposed to be at 75% of the maximum brightness, and this is implemented by having all the lights enter the "Turn Light ON, which is coded as LEDx=1" instruction for 75% of the time (in the proposed technique this part equals 15 since the total is 20), after that we take LEDs of Row-2 out of the instruction "Turn Light ON" into "Turn the Light OFF, which is coded as LEDx=0", this way the LEDs of Row-2 will have 75% of brightness which is the required brightness in this scenario. In the same pattern, if LEDx=1 for 5 and then is turned 0 for the rest of the instruction time, we will have 25% of the maximum brightness of the LED. In our proposed technique, instead of having each LED's brightness depends on the sensors nearby according to some priority, we have implemented all possible scenarios into subroutines, to which the system will go according to the sensors readings, with one exception, which is scenario 18, which indicates that the proposed techniqueor is ON. In order to make sure that no matter in which scenario we are once the proposed techniqueor is ON we will go to scenario 18 we have included a check line.

```
354 IF PROJCTOR=1 THEN GOTO scenario18 END IF
```

V. CONCLUSION

White LEDs are one of the finest lighting source technology today, using it is the smart thing to do. In addition, it is true that Compact Fluorescent Lights are to some level can be considered energy-efficient, but neither their cost nor the health harming effects should be neglected, they were just a temporary solution, and now that we have LEDs technology they ought to be used. As for Lighting Control Systems, we have been providing all the reasons for it to be implemented everywhere, and for a start, there is no place better to be the first step of such technology than universities. For one thing it is a better technology than the classic one we are using currently in terms of cost and energy efficiency, in addition universities are supposed to be the pioneers when it comes to development and improvement in any country. The proposed scheme has been shown to be very cost effective and efficient in reducing power consumption by its automation feature and it is very much suitable for schools and universities.

APPENDIX A

Class Room	Number of Chairs	Average Number Of Students	Number Of Rows (Of Light Blocks)	Number Of Columns (Of Light Blocks)	Total Number Of Fluorescent Light Tubes	Wasted Amount of energy currently
2001	68	43	5	4	80	36%
2002	45	31	4	3	48	31%
2003	69	39	5	4	80	43%
2004	45	20	4	3	48	50%
2005	45	31	4	3	48	31%
2006	69	60	5	4	80	13%
2007	45	34	4	3	48	24%
2008	69	55	5	4	80	20%
2009	68	41	5	4	80	40%
2010	46	32	4	3	48	30%
2011	69	48	5	4	80	30%
2012	45	32	4	3	48	28%
2013	45	25	4	3	48	44%
2014	68	43	5	4	80	37%
2015	45	29	4	3	48	35%
2016	69	61	5	4	80	11%
2017	68	41	5	4	80	39%
2018	45	27	4	3	48	40%
2019	69	40	5	4	80	42%
2020	45	37	4	3	48	17%
2021	45	34	4	3	48	24%
2022	68	54	5	4	80	21%
2023	45	28	4	3	48	37%
2024	69	65	5	4	80	5%
2025	48	29	5	3	60	39%

The Total Number of Fluorescent Light Tubes = 1596.

One of the purposes of implementing lighting control system is to cut off the wasted energy which equals to 30.68%.

REFERENCES

1. F. Domínguez, A. Touhafi, J. Tiete, K. Steenhaut, "Coexistence with WiFi for a home automation ZigBee product", in the proceeding 19th IEEE Symposium on Communications and Vehicular Technology in the Benelux (SCVT'12), Eindhoven, Netherlands, 16 November 2012.
2. Burhanuddin Bharmal, Aniruddha Shahapurkar , Akshay Aswalkar, "Automatic Home Lighting solutions using Human Detection, Sunlight Intensity and Room Temperature", International Research Journal of Engineering and Technology (IRJET), Volume: 04 Issue: 06, June -2017.
3. D. Kumar Yadav, S. Singh, S. Pujari, Pragyan Mishra UG Student, Dept. of ECE, Sambalpur University Institute of Information Technology, "Fingerprint based Attendance system using microcontroller and labview."International Journal of Advanced Research in Electrical, Electronics and Instrumentation Engineering (An ISO 3297: 2007 Certified Organization)Vol. 4, Issue 6, June 2015.
4. D. M. Han and J.H. Lim, "Smart Home Energy Management System using IEEE 802.15.4 and Zigbee", IEEE Transactions on Consumer Electronics, vol. 56 (3): pp. 1403-1410, 2010
5. G. Song, Z. Wei, W. Zhang and A. Song, "A Hybrid Sensor Network System for Home Monitoring Applications", IEEE Transactions on Consumer Electronics, vol. 53 (4): pp. 1434-1439, 2007.
6. J. Byun, B. Jeon, J. Noh, Y. Kim, and S. Park, "An Intelligent Selfadjusting Sensor for Smart Home Services based on ZigBee Communications", IEEE Transactions on Consumer Electronics, vol. 58 (3): pp. 794-802, 2012.
7. C. Chengyi, Z. Guannan, and J. Minglu, "A ZigBee based Embedded Remote Control System" in the proceeding 2nd International Conference on Signal Processing Systems (ICSPS'10), 2010.
8. K. H. Ang, G. Chong, and Y. Li, "PID Control System Analysis, Design, and Technology", IEEE Transactions on Control Systems Technology, vol. 13 (4): pp. 559-576, 2005.
9. J. C. Basilio and S.R. Matos, "Design of PI and PID Controllers with Transient Performance Specification", IEEE Transactions on Education, vol. 45 (4): pp. 364-370, 2002.
10. K. Gill, S-H Yang, F. Yao, and X. Lu, "A Zigbee-based Home Automation System", IEEE Transactions on Consumer Electronics, vol. 55 (2): pp. 422-430, 2009.
11. S, Suresh & Anusha, H.N.S. & Rajath, T & Soundarya, P & Vudatha, S.V.Prathyusha. (2016). Automatic lighting and Control System For Classroom. 1-6, 2016.
12. S.-F. Li, "Wireless Sensor Actuator Network for Light Monitoring and Control Application", in the proceeding of 3rd IEEE Consumer Communications and Networking Conference (CCNC'06), 2006.
13. Han-Way Huang. (2005). PIC Microcontroller: An introduction to software and hardware/ THOMSON DELMAR LEARNING.
14. D. W. Smith. (2006). PIC in Practice: A Proposed technique-Based Approach /NEWNES.
15. Myke Predko. (2008). Programming And Customizing PIC Microcontroller / TAB Electronics.
16. https://en.wikipedia.org/wiki/MIDI_1.0 [Accessed 15/8/2019].
17. https://www.insteon.com/ [Accessed 1/7/2019].
18. https://www.control4.com/ [Accessed 15/8/2019].
19. Bert Van Dam. (2008). PIC Microcontrollers: 50 Proposed techniques for beginners and experts / Elektor.
20. Lucio Di Jasio, J. Smith, D. W. Smith. (2008). PIC Microcontrollers: Know it All / NEWNES.
21. Dr. Magda Havas. (June 5, 2008). Health Concerns Associated with Energy Efficient Lighting and their electromagnetic emission. SCENIHR & Light Sensitivity.
22. Yimin Gu. (2004). White LED performance. Society of Photo-Optical Instrumentation Engineers.
23. http://optics.org/indepth/2/6/4 [Accessed 15/4/2018].
24. http://www.philips.co.uk/c/spotspecial-led-light/11588/cat/#filterState0=LED_SPOTSPECIAL_SU_GB_CONSUMER%3Dtrue [Accessed 3/3/2012].
25. http://www.edaboard.com/thread45254.html [Accessed 15/3/2018].
26. http://www.gooligum.com.au/tut_baseline_C.html [Accessed 1/4/2019].
27. http://en.wikipedia.org/wiki/Light-emitting_diode, [Accessed 15/4/2019].
28. http://www.instructables.com/community/Price-of-regular-white-LEDs [Accessed 16/4/2019] .
29. http://eartheasy.com/live_led_bulbs_comparison.html [Accessed 17/4/2018].
30. http://www.kingsunlights.com/led-comparison/ [Accessed 17/4/2019].
31. http://www.designrecycleinc.com/led%20comp%20chart.html [Accessed 18/4/2019].

AUTHORS PROFILE

Awni Itradat is an Associate Professor in the Department of Computer Engineering, Hashemite University. He received the B.SC. degree in Computer Engineering from Jordan University of Science and Technology, Jordan in 2000, and the Master and Ph.D. degrees in Computer Engineering from Concordia University, Montreal, Canada in 2008. In 2009, he was appointed as the chairman of the Department of Computer Engineering at the Faculty of Engineering in the Hashemite University. He has also served as a Director of the ICT and E-learning Center at the Hashemite University. Moreover, recently, he served as the Acting Dean of the Engineering Faculty at the Hashemite University and under his administration, the faculty of Engineering pursue ABET Accreditation for all engineering programs. His research interests include Computer Architecture, Networks theory, Design of VLSI circuits and systems, Interconnects Modeling and Design, Reconfigurable Circuits, High Level Synthesis and Resource Allocation of 3D- and 2D-Circuits and Systems.

Mohammad Hammoudeh received the B.SC. degree in Computer Engineering from Hashemite University, Jordan in 2012. Consultant at Protiviti. His research interests include cloud computing and networks, security, and microprocessors

Talal Khawaldeh received the B.SC. degree in Computer Engineering from Hashemite University, Jordan in 2013. Safety Engineer at masharii. His research interests include microcontrollers, computer security.

Ahmad Ismail received the B.SC. degree in Computer Engineering from Hashemite University, Jordan in 2013. He works as a networking engineer. His research interests include 3D integrated circuits design, and network security.

A. Mohammad Al-shorfat received the B.SC. degree in Computer Engineering from Hashemite University, Jordan in 2014. CCNAX, Fiber Optics expert. His research interests include smart circuits design, hardware synthesis, computer security.